HYDRAULIC MOTORS with Dual shaft MRB

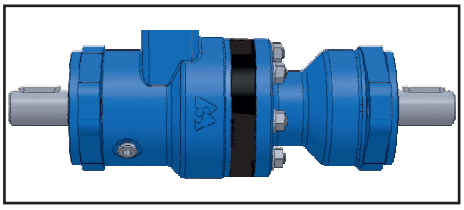

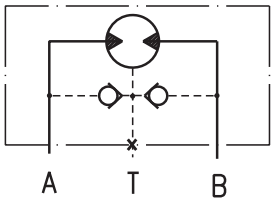

APPLICATION

- » Conveyors;
- » Feeding mechanism of robots and manipulators;
- » Metal working machines;
- » Textile machines;
- » Agricultural machines;
- » Food industries;
- » Mining machinery etc.

OPTIONS

- » Model - Spool valve, roll-gerotor;
- » Dual shaft;
- » Oval flange;
- » Side port;
- » Straight shafts;
- » BSPP ports;
- » Other special features.

OUTLINE DIMENSINS REFERENCE

mm [in]

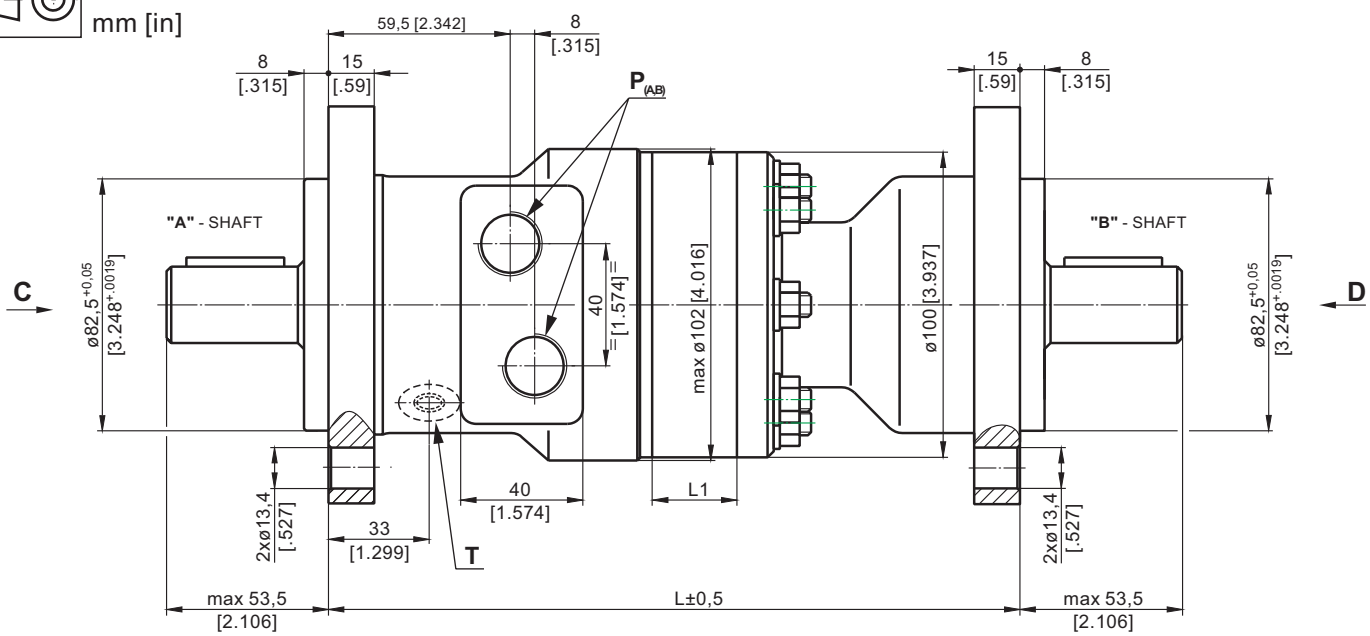

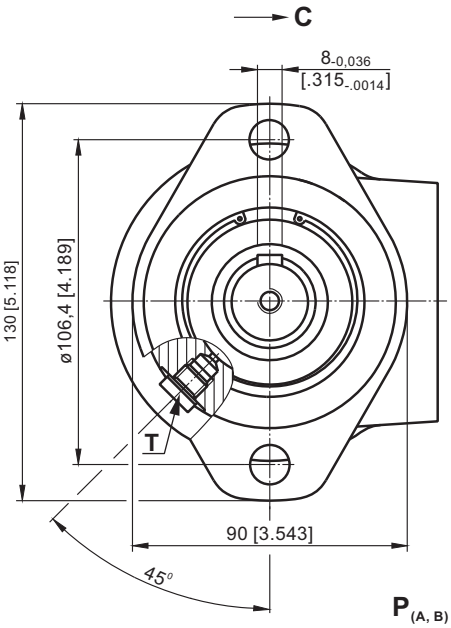

Type	L, mm [in]	L_1, mm[in]
MRB 50	211,7 [8.33]	9,0 [.35]
MRB 80	216,7 [8.53]	14,0 [.55]
MRB 100	216,1 [8.51]	17,4 [.69]
MRB 125	220,5 [8.68]	21,8 [.86]
MRB 160	226,5 [8.92]	27,8 [1.09]
MRB 200	233,5 [9.19]	34,8 [1.37]
MRB 250	242,2 [9.54]	43,5 [1.71]
MRB 315	253,5 [9.98]	54,8 [2.16]
MRB 400	268,1 [10.56]	69,4 [2.73]

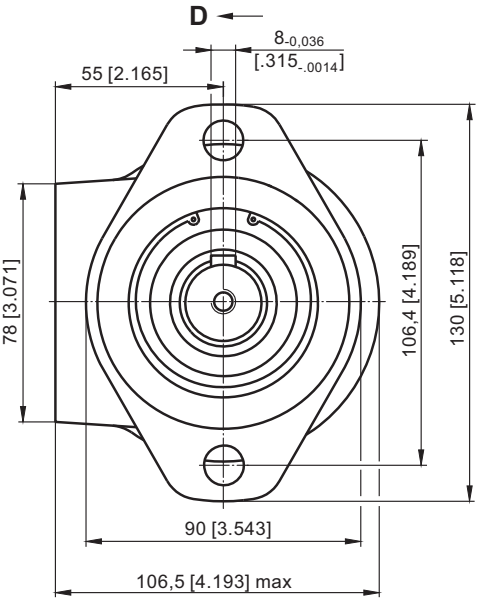

P(A, B) : 2xG1/2 - 18 mm [.71 in] depth
T : G1/8 - 9 mm [.35 in] depth (plugged)

M+S HYDRAULIC

SPECIFICATION DATA

Type		MRB 50 C/C	MRB 80 C/C	MRB 100 C/C	MRB 125 C/C	MRB 160 C/C	MRB 200 C/C	MRB 250 C/C	MRB 315 C/C	MRB 400 C/C
Displacement, cm³/rev [in³/rev]		51,5[3.14]	80,3[4.9]	99,8[6.09]	125,7[7.67]	159,6[9.74]	199,8[12.19]	250,1[15.26]	315,7[19.26]	397 [24.4]
Max. Speed, RPM	cont.	775	750	600	475	375	300	240	190	150
	int.*	970	940	750	600	470	375	300	240	190
Max. Torque, daNm [lb-in]	cont.	10 [885]	19,5 [1725]	24 [2125]	30 [2655]	30 [2655]	30 [2655]	30 [2655]	30 [2655]	30 [2655]
	int.*	13 [1150]	22 [1947]	28 [2480]	34 [3010]	39 [3450]	39 [3450]	38 [3360]	42 [3720]	43 [3805]
Max. Torque "A"Shaft, daNm [lb-in]	cont.	8 [710]	11,5 [1000]	12 [1060]	20 [1770]	20 [1770]	20 [1770]	20 [1770]	20 [1770]	20 [1770]
	int.*	9,5 [840]	13 [1150]	14 [1240]	23 [2035]	23 [2035]	23 [2035]	23 [2035]	23 [2035]	23 [2035]
Max. Torque "B"Shaft, daNm [lb-in]	cont.	4 [355]	11,5 [1000]	12 [1060]	20 [1770]	20 [1770]	20 [1770]	20 [1770]	20 [1770]	20 [1770]
	int.*	5 [440]	13 [1150]	14 [1240]	23 [2035]	23 [2035]	23 [2035]	23 [2035]	23 [2035]	23 [2035]
Max. Output, [kW] [HP]	cont.	7 [9.5]	12,5 [17]	13 [1150]	12,5 [17]	10 [13.4]	8 [10.7]	6 [8.0]	5 [6.7]	4 [5.4]
	int.*	8,5 [11.9]	15 [20.1]	15 [20.1]	14,5	12,5 [17]	10 [13.4]	8 [10.7]	6,5 [8.7]	6 [8.0]
Max. Pressure Drop, bar [PSI]	cont.	140 [2030]	175 [2540]	175 [2540]	175 [2540]	130 [1885]	110 [1600]	80 [1160]	70 [1020]	55 [800]
	int.*	175 [2540]	200 [2900]	200 [2900]	200 [2900]	175 [2540]	140 [2030]	110 [1600]	100 [1450]	80 [1160]
Max. Oil Flow, lpm [GPM]	cont.	40 [10.5]	60 [15.9]	60 [15.9]	60 [15.9]	60 [15.9]	60 [15.9]	60 [15.9]	60 [15.9]	60 [15.9]
	int.*	50 [13.2]	75 [18.5]	75 [18.5]	75 [18.5]	75 [18.5]	75 [18.5]	75 [18.5]	75 [18.5]	75 [18.5]
Max. Return Pressure without Drain Line, bar [PSI]	cont. 0 - 100 RPM	75 [1090]	75 [1090]	75 [1090]	75 [1090]	75 [1090]	75 [1090]	75 [1090]	75 [1090]	75 [1090]
	cont. 100-200 RPM	50 [730]	50 [730]	50 [730]	50 [730]	50 [730]	50 [730]	50 [730]	50 [730]	50 [730]
	cont. 200-500 RPM	20 [290]	20 [290]	20 [290]	20 [290]	20 [290]	20 [290]	20 [290]	20 [290]	20 [290]
	int.* 0 - max RPM	75 [1090]	75 [1090]	75 [1090]	75 [1090]	75 [1090]	75 [1090]	75 [1090]	75 [1090]	75 [1090]

* Intermittent operation: the permissible values may occur for max. 10% of every minute.

1. Intermittent speed and intermittent pressure must not occur simultaneously.
2. Recommended filtration is per ISO cleanliness code 20/16. A nominal filtration of 25 micron or better.
3. Recommend using a premium quality, anti-wear type mineral based hydraulic oil HLP(DIN51524) or HM (ISO 6743/4). If using synthetic fluids consult the factory for alternative seal materials.
4. Recommended minimum oil viscosity 13 mm²/s [70 SUS] at 50°C [122°F].
5. Recommended maximum system operating temperature is 82°C [180°F].
6. To assure optimum motor life fill with fluid prior to loading and run at moderate load and speed for 10-15 minutes.

SHAFT EXTENSIONS

C - ø25 straight, Parallel key A8x7x30 DIN 6885
Max. Torque 34 daNm [3010 lb-in]

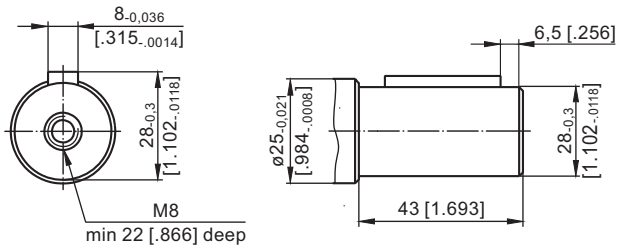

SH - 1" splined, BS 2059 (SAE 6B)
Max. Torque 40 daNm [3540 lb-in]

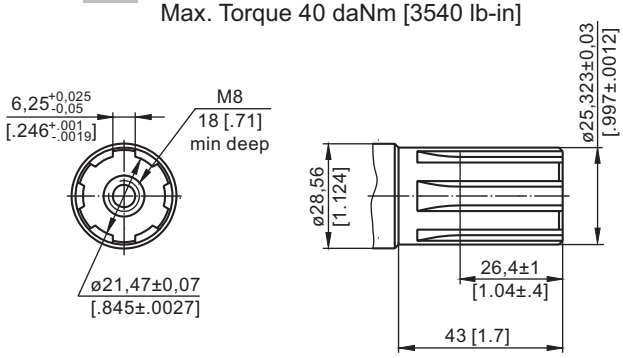

PERMISSIBLE SHAFT LOADS

The load diagrams are valid for an average bearings life of 1600 hrs at 200 r.p.m. with mineral base lubricating containing antiwear additives (ref.ISO 281 (3.3) standard).
The "A" curve gives the maximum static load affordable by the bearings.
The "B" curve gives the radial load top limit without axial load of 200 daN.

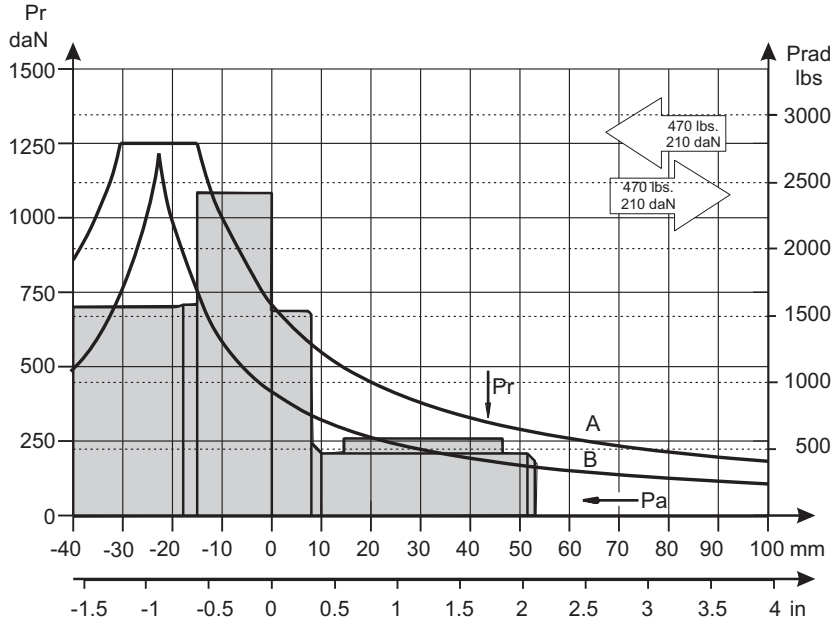

ORDER CODE

	1	2		3	4	5
M R B			/			

Pos.1 - Displacement code

50	- 51,5 cm^3/rev [3.14 in^3/rev]
80	- 80,3 cm^3/rev [4.90 in^3/rev]
100	- 99,8 cm^3/rev [6.09 in^3/rev]
125	- 125,7 cm^3/rev [7.67 in^3/rev]
160	- 159,6 cm^3/rev [9.74 in^3/rev]
200	- 199,8 cm^3/rev [12.19 in^3/rev]
250	- 250,1 cm^3/rev [15.26 in^3/rev]
315	- 315,7 cm^3/rev [19.26 in^3/rev]
400	- 397,0 cm^3/rev [24.40 in^3/rev]

Pos.2 - "A" Shaft Extensions*

C	- ø25 straight, Parallel key A8x7x30 DIN6885
SH	- 1" splined, BS 2059 (SAE 6B)

Pos.3 - "B" Shaft Extensions*

C	- ø25 straight, Parallel key A8x7x30 DIN6885
SH	- 1" splined, BS 2059 (SAE 6B)

Pos.4 - Special Features (see page 120)

Pos.5 - Design Series

omit - Factory specified

NOTES: * For other shaft extensions please contact with "M+S Hydraulic".
** Color at customer's request.

The hydraulic motors are mangano-phosphatized as standard.